Changing the 4D Armrest

1. Check the number of damaged 4D armrests on your chair.

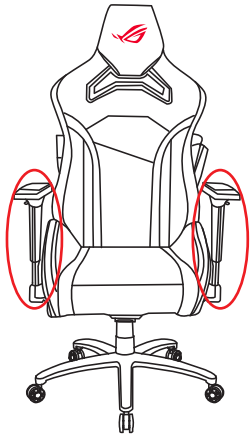

2. Lay your chair down with armrests' 3 bolts displayed.

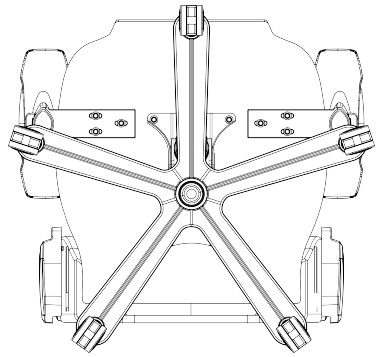

3. Use a hex key to remove the bolts and uninstall the damaged armrests.

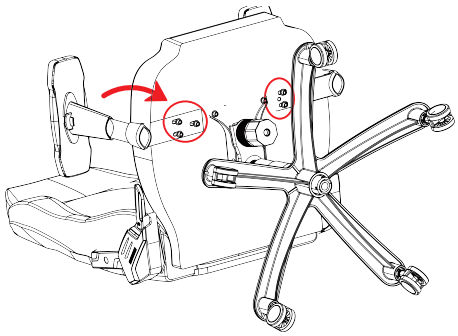

4. Install the new 4D armrests and tighten the 3 bolts.

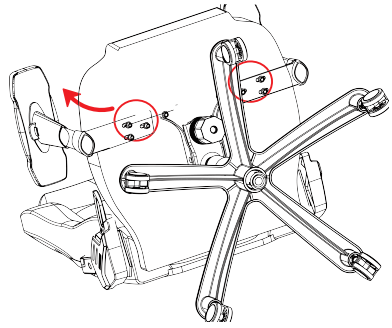

Changing the PU wheel

1. Remove the damaged PU wheels.

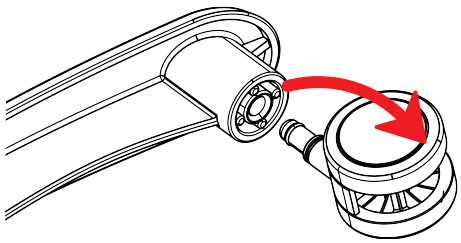

2. Insert new PU wheels into the wheel base.

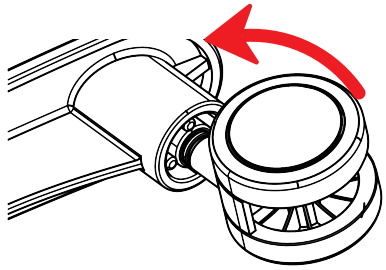

Changing the Seat base

Work with another person to pull the seat base upward with one foot on the wheel base and one hand holding the bracket.

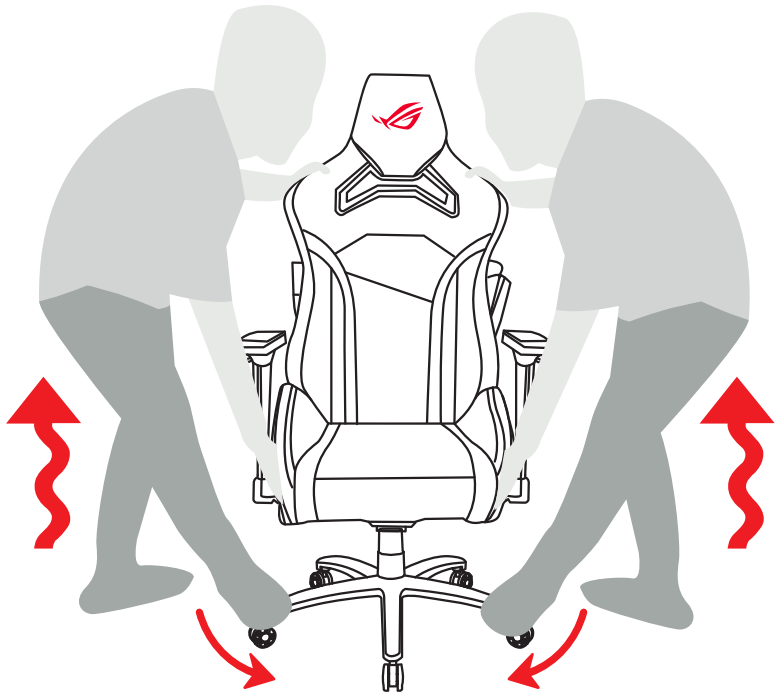

Changing the Telescopic cover

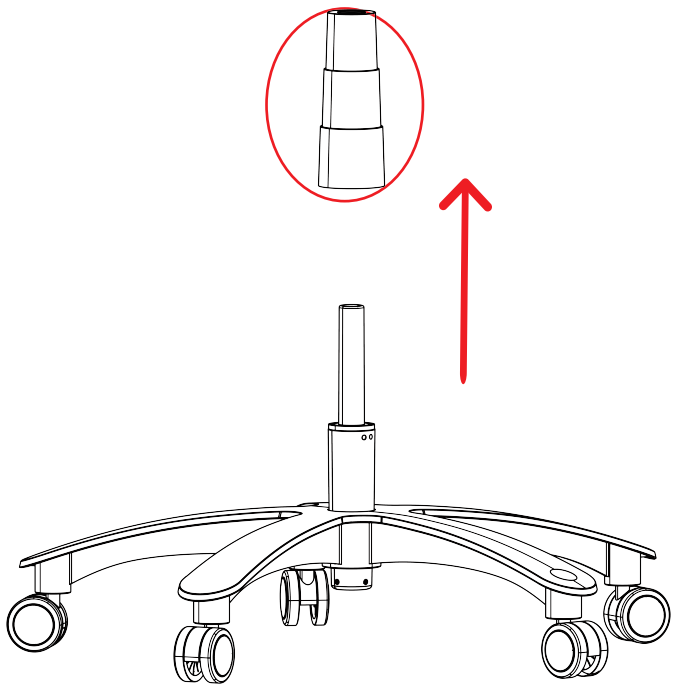

Changing the Hydraulic lift cylinder

1. Ensure that the hydraulic lift cylinder of your chair has been damaged.
2. Work with another person to pull the seat base upward with one foot on the wheel base and one hand holding the bracket.
3. Remove the telescopic cover and strike the bottom of the hydraulic lift cylinder onto a solid object to remove the damaged hydraulic lift cylinder.
4. Insert a new hydraulic lift cylinder into the hole of the wheel base.
5. Work with another person to insert the top of the new hydraulic lift cylinder into the mounting hole of the control unit.

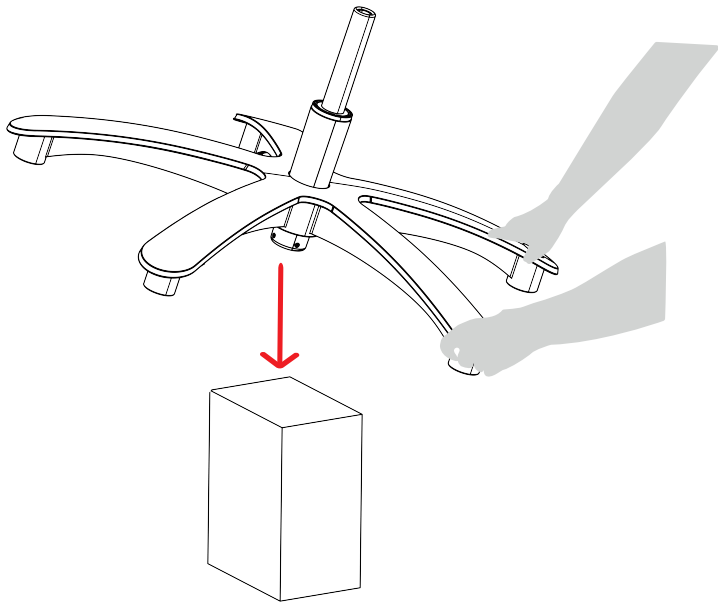

Changing the Locking caster

1. Ensure that the locking casters have been damaged.
2. Work with another person to pull the seat base upward with one foot on the wheel base and one hand holding the bracket.
3. Remove the telescopinc cover and strike the bottom of the hydraulic lift cylinder onto a solid object to remove the hydraulic lift cylinder.
4. Replace the damaged locking casters with new ones.
5. Work with another person to insert the top of the new hydraulic lift cylinder into the mounting hole of the control unit.

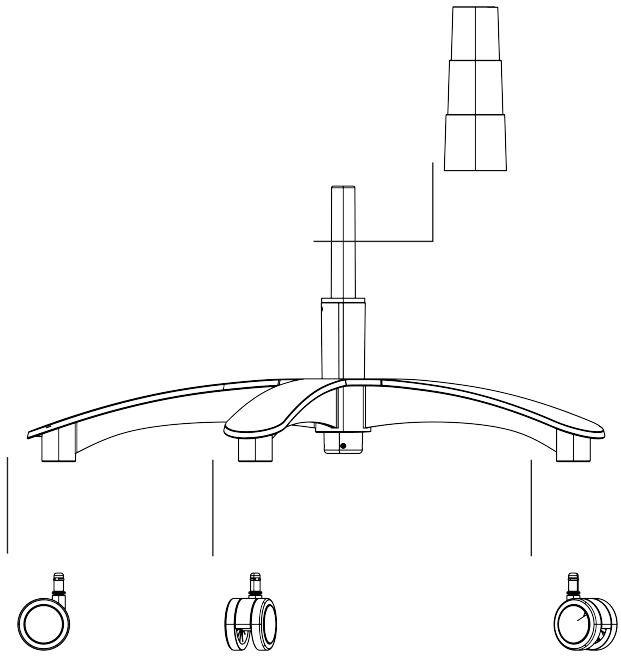

Changing the Control unit

1. Ensure that the control unit has been damaged.
2. Work with another person to pull the seat base upward with one foot on the wheel base and one hand holding the bracket.
3. Remove the 4 bolts from the control unit.
4. Install a new control unit and secure it with the 4 bolts.
5. Work with another person to attach the control unit to the seat base.

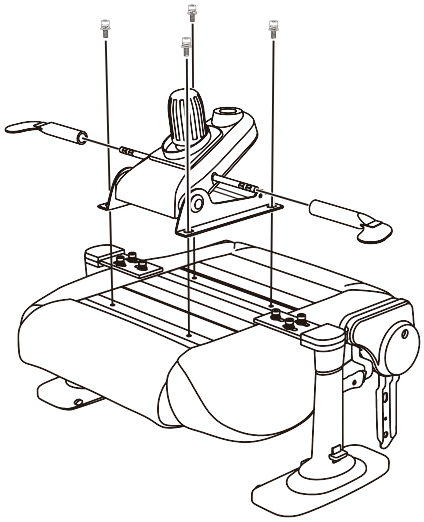

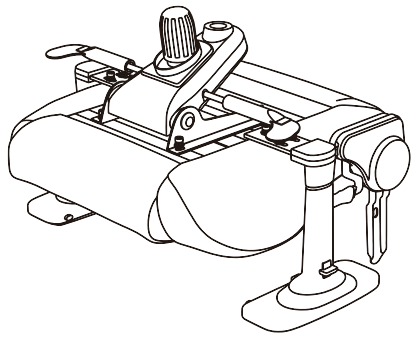

Changing the Side cover

1. Ensure that the side covers have been damaged.
2. Use the hex key to remove the bolts from the side covers.
3. Replace the damaged side covers with new ones and secure them with the bolts.

