EK-FC TRIO RTX 2080 Ti Backplate Classic

BACKPLATE

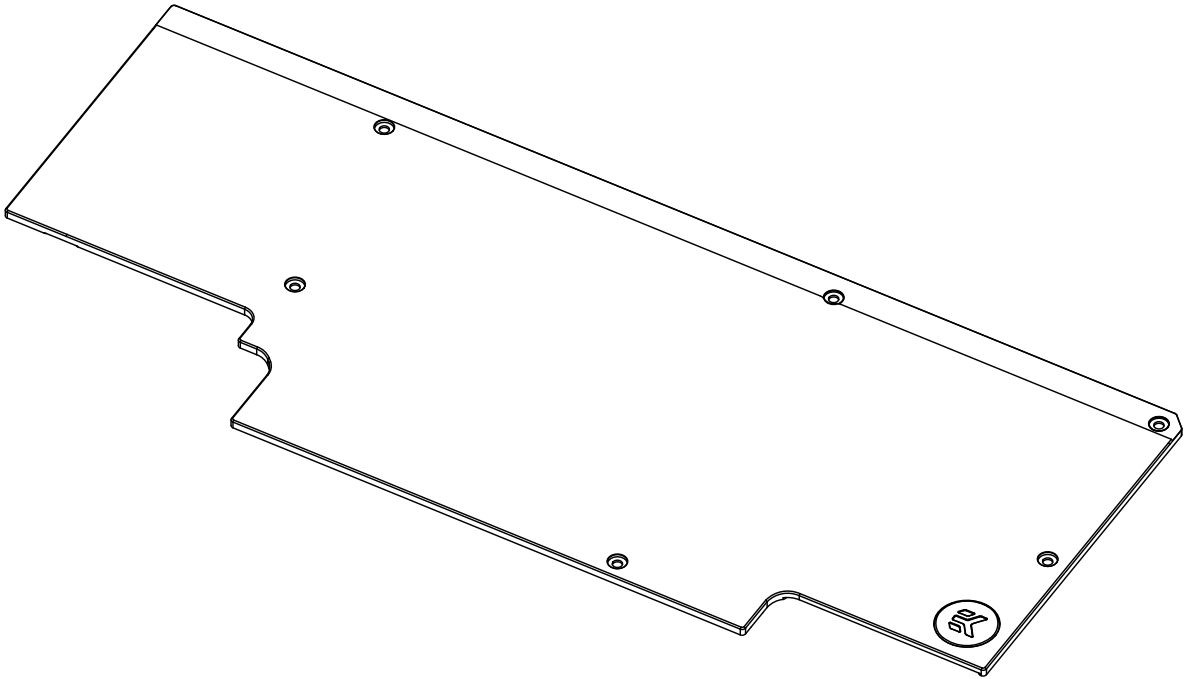

INSTALLATION MANUAL

This product is intended for installation only by expert users. Please consult with a qualified technician for installation. Improper installation may result in damage to your equipment. EK Water Blocks assumes no liability whatsoever, expressed or implied, for the use of these products, nor their installation. The following instructions are subject to change without notice. Please visit our web site at www.ekwb.com for updates. Before installation of this product please read important notice, disclosure and warranty conditions printed on the back of the box.

Before you start using this product please follow these basic guidelines:

Please carefully read the manual thoroughly before beginning with the installation process!

Please remove your graphics card from the computer to assure safest mounting process in order to prevent any possible damages to your GPU and/or graphics card circuit board (PCB).

The EK fittings require only a small amount of force to screw them firmly in place since the liquid seal is ensured by the rubber O-ring gaskets.

The use of corrosion inhibiting coolants is always recommended for any liquid cooling system.

Do not use pure distilled water! For best results EK recommends the use of EK-CryoFuel coolants!

TABLE OF CONTENT

GENERAL INFORMATION 4
PREPARING YOUR GRAPHICS CARD 4
ATTACHING EK-FC Trio RTX 2080 Ti Backplate Classic TO THE GRAPHICS CARD 5
REQUIRED TOOLS 6
IMPORTANT DISCLOSURES 6
SUPPORT AND SERVICE 7
SOCIAL MEDIA 7

GENERAL INFORMATION

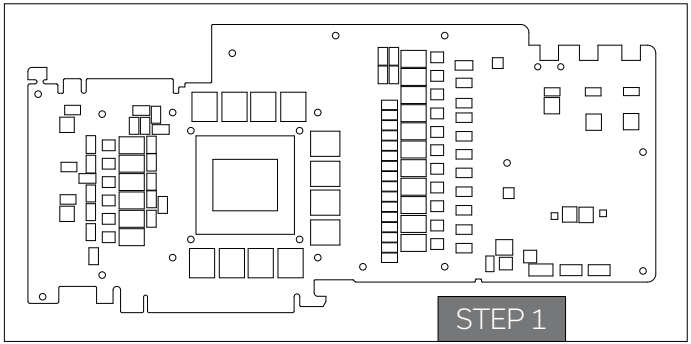

STEP 1
Sample picture of RTX 2080 Ti Gaming X Trio graphics card.

PREPARING YOUR GRAPHICS CARD

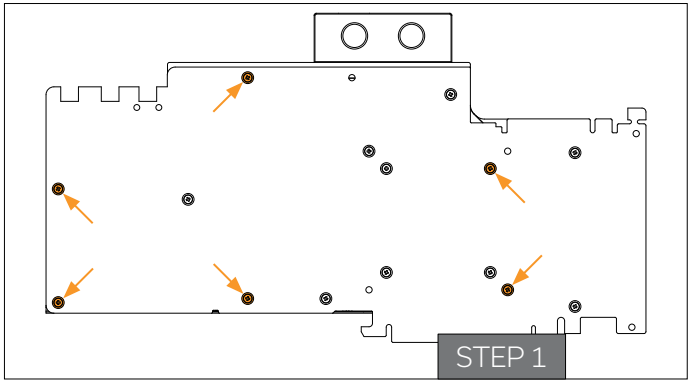

STEP 1
First install EK-FC TRIO RTX 2080 TI CLASSIC water block according to its installation manual. If you have it already installed, please check the picture below to see which mounting screws are to be left in their position and which are to be removed. Please remove the six (6) M2.5x4 AX1 screws and their PVC washers as well (marked with arrow).

ATTACHING EK-FC Trio RTX 2080 Ti Backplate Classic TO THE GRAPHICS CARD

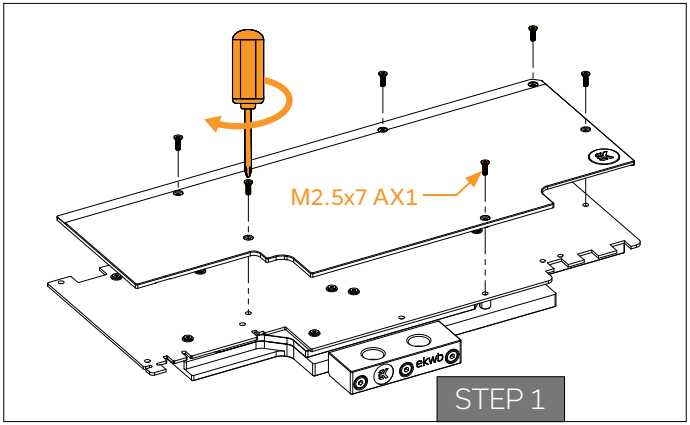

STEP 1
Take enclosed mounting screws and install them as shown on picture below. Use six(6) M2.5X7 AX1 screws, and tighten them using Philips head screwdriver.

HINT: Do not tighten screws until they are all positioned in their mounting holes. The backplate has milled in standoffs, so there is no fear of over tightening of the screws. Nevertheless, do not exaggerate with screwing force as there is no need for it.

By all means users must also consider that this product is intended to be used only with EK-FC Trio 2080 Ti Classic series water blocks. No other 3rd party heat sinks or coolers are officially supported! EK does not offer any assistance or support in the latter application.

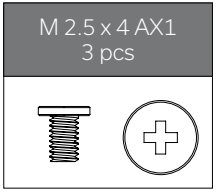

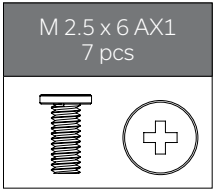

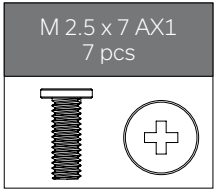

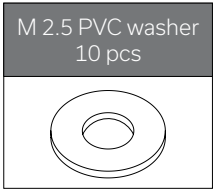

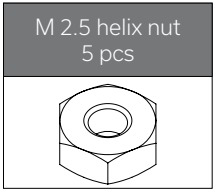

BAG CONTENT:
Bag content is universal for all backplates, you may not need all screws.

REQUIRED TOOLS

Phillips-head screwdriver

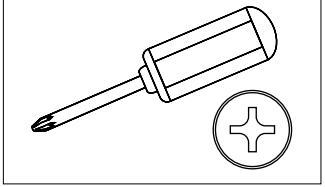

Scissors

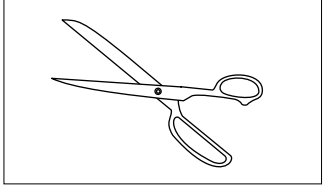

IMPORTANT DISCLOSURES

VERY IMPORTANT NOTICE:
Once the installation is completed, it is a recommended practice to test the cooling circuit for leaks prior to powering up the computer. We recommend a 24 hour leak test prior to powering up the computer. Do not test the water block using city water pressure. This will rupture the top of the housing and render the block unusable (and will void your warranty). While all efforts have been made to provide the most comprehensive tutorial possible, EK Water Blocks assumes no liability expressed or implied for any consequential damage(s) occurring to your equipment as a result of using EK Water Blocks cooling products, either due to errors or omissions on our part in the above instructions, or due to failure or defect in the EK Water Blocks cooling products.

WARRANTY:
Our products are warranted against defects in materials or workmanship for a period of 24 months beginning from the date of delivery to the final user. During this period, products will be repaired or have parts replaced at our discretion provided that : (I) the product is returned to the agent from whom it was purchased; (II) the product has been purchased by an end user and has not used for commercial purposes; (III) the product has not been misused, handled carelessly, or used in a manner other than in accordance with the instructions provided describing its installation and proper use. This warranty does not confer rights other than those expressly set out above and does not cover any claims for consequential loss or damage. This warranty is offered as an extra benefit and does not affect your statutory rights as a consumer. This warranty is voided if the product comes in contact with aggressive UV additives or other improper liquids.

EK blocks are sealed with warranty void circular label, which proves that the block has withstood a pressure leak test. Removing it will void leak-free guarantee and not the guarantee on the product itself. Any other RMA issues can be reported to EK Support at www.ekwb.com/support for further analysis.

SUPPORT AND SERVICE

For assistance please contact:
http://support.ekwb.com/

EKWB d.o.o.
Pod lipami 18
1218 Komenda
Slovenia - EU

SOCIAL MEDIA

EKWaterBlocks

@EKWaterBlocks

ekwaterblocks

EKWBofficial

ekwaterblocks